Tiandy

TC-C32LQ Spec:I3/E/T/6mm

Thermal & Optical Bi-spectrum Network Bullet Camera

KEY FEATURES

- Supports optical and thermal bi-spectrum image
- Thermal Resolution 120×90, output resolution up to 1280×960@30fps
- Measure Accuracy ±0.5°C, (±0.3°C with black body)
- Optical Resolution up to 1920×1080@30fps
- Optical Min. illumination Color: 0.001Lux@F1.6
- Smart IR, IR Range: 30m
- Built-in Mic & Speaker
- POE, IP67

Tiandy Technologies Co.,Ltd.
Email: sales@tiandy.com Tel: +86-22-58596065
Website: en.tiandy.com Fax: +86-22-58596048

Tiandy

SPECIFICATIONS

Thermal Module	
Image Sensor	Vanadium Oxide Uncooled Focal Plane Arrays
Max. Resolution	120×90
Pixel Interval	17μm
Response Waveband	8 μm to 14 μm
NETD	≤60mK
Temperature Measurement Range	30°C (86°F) to 45°C (113°F)
FOV	Horizontal field of view: 50°
Optical Module	
Image Sensor	1/2.8" CMOS
Signal System	PAL/NTSC
Min. Illumination	Color: 0.001Lux@ (F1.6, ACG ON), B/W: 0Lux with IR
Shutter Time	1s to 1/100,000s
Day & Night	Dual IR Cut Filter with Auto Switch
Wide Dynamic Range	120dB
Lens	
Lens Type	Fixed
Focus	6mm
Lens Mount	Ø14
Aperture	F1.6
FOV	Horizontal field of view: 60°
Illuminator	
IR LEDs	2
IR Range	Up to 30m
Wavelength	850nm
White LEDs	N/A
Compression Standard	
Video Compression	S+265/H.265/H.264/M-JPEG
Video Bit Rate	32 Kbps to 16 Mbps
Audio Compression	G.711A/G.711U/ADPCM/AAC
Audio Bit Rate	8K~48Kbps
Image	
Max. Resolution	1920×1080
Main Stream	PAL: 25fps (1920×1080, 1280×720, 704×576), Thermal: 25fps (1280×960, 1024×768, 640×480, 256×192) NTSC: 30fps (1920×1080, 1280×720, 704×576) Thermal: 30fps (1280×960, 1024×768, 640×480, 256×192)
Sub Stream	PAL: 25fps (704×576, 640×360, 352×288) NTSC: 30fps (704×480, 640×360, 352×240)
Third Stream	1920×1080, 1280×720, 704×576, 640×480, 704×288
Image Setting	Saturation, brightness, contrast, sharpness, adjustable by client software or web browser
Image Enhancement	BLC/3D DNR/HLC
ROI	Support 7 fixed region of coding
OSD	16×16, 24×24,32×32, 48×48, 64x64, 96x96, adaptable size, Letters Such as Week, Date, Time, Total 5 Regions
Picture Overlay	Yes
Privace Mask	Yes
Smart Defog	Yes
Feature	
Alarm Trigger	Event Input, Event Output, Motion Detection, Mask Alarm, Disk Full, Disk R/W Error, IP Address Conflict, MAC Address Conflict, FTP Server Exception
Video Analytics	Tripwire, Double Tripwire, Perimeter, Object Abandon, Object Lost, Loitering, Running, Parking, Video Abnormal, Audio Abnormal
Early Warning(EW)	Yes
Smart Coding	N/A
Smart Image	N/A
Smart Alarm	N/A

Tiandy

SPECIFICATIONS

Network	
ANR	Yes, auto store video in SD card when NVR disconnected, and upload video to NVR when resumed connection (Only Support Tiandy ANR NVR)
Protocols	TCP/IP, ICMP, HTTP, HTTPS, DHCP, DNS, DDNS, MULTICAST, UPnP, FTP, IPV4, NTP, RTSP, SMTP, IGMP, QoS, IPV6
System Compatibility	ONVIF (PROFILE S), SDK, CGI, P2P
Remote Connection	≤7
Client	Easy7, EasyLive
Web Version	Web6
Interface	
Communication Interface	1 RJ45 10M/100M self adaptive Ethernet port
Audio	1/1, Mic in
Alarm	2/1
Reset Button	Yes
On-board storage	Built-in MicroSD card slot, up to 256 GB
General	
Firmware Version	-
Web Client Language	15 languages English, Russian, Spanish, Korean, Italian, Turkish, Simple Chinese, Traditional Chinese, Thai, French, Polish, Dutch, Hebraism, Farsi, Arabic
Operating Conditions	-20℃～60℃ (IR OFF), -20℃～40℃ (IR ON), 0～95% RH
Power Supply	DC12V±20%/PoE
Power Consumption	MAX: 10.5W
Protection	IP67
Heater	N/A
Dimensions	224×114×107 mm (8.81*4.49*4.21 inch)
Weight	1.3kg (2.87lb)

* Listed resolutions are only selectable options. It does not mean that all streams can work at their maximum resolution at the same time.

AVAILABLE MODEL

TC-C32LQ SPEC:I3/E/T/6MM

Tiandy

DIMENSIONS (Unit: mm)

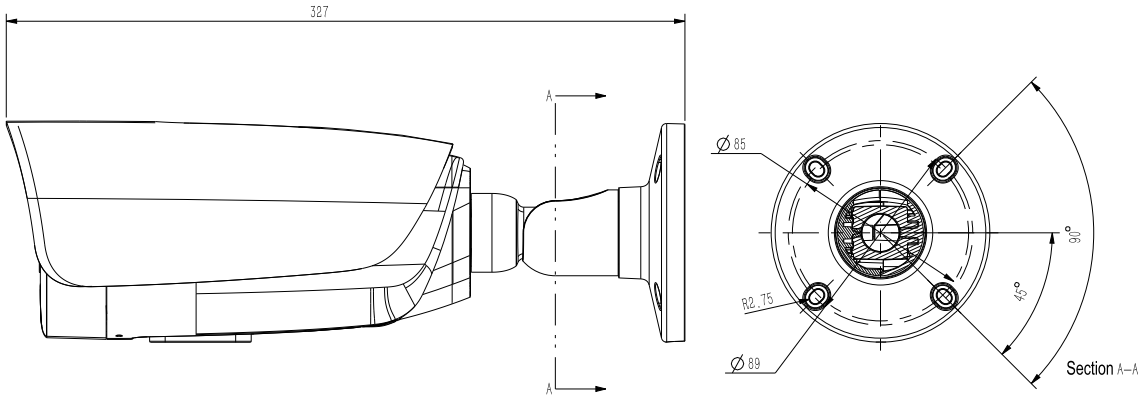

ACCESSORIES

A36
Pole Mount

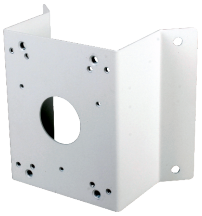

A35
Corner Mount

TC-P54AM Spec:V4
Junction Box

A22
Junction Box

SELMET
10 000 Zagreb, Kranjčevićeva 5

013688750, info@selmet.com ; www.selmet.hr